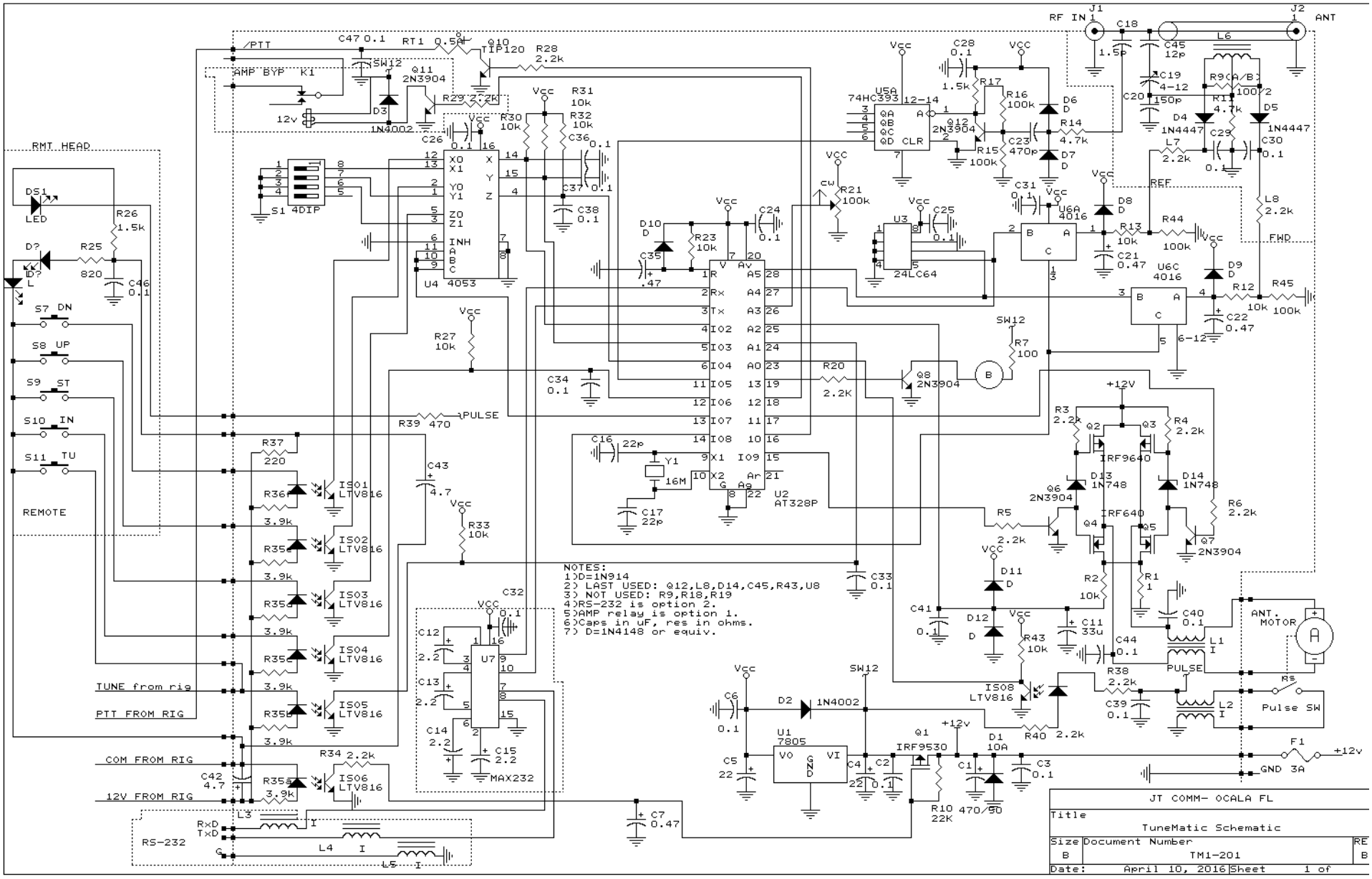
RF IN
ANT
/PTT
AMP BYP
K1
12v
RMT HEAD
LED
REMOTE
S7 DN
S8 UP
S9 ST
S10 IN
S11 TU
TUNE from rig
PTT FROM RIG
COM FROM RIG
12V FROM RIG
RS-232
RxD
TxD
G
PULSE
REF
FWD
ANT. MOTOR
Pulse SW
GND 3A
+12v
NOTES:
1)D=1N914
2) LAST USED: Q12,L8,D14,C45,R43,U8
3) NOT USED: R9,R18,R19
4)RS-232 is option 2.
5)AMP relay is option 1.
6)Caps in uF, res in ohms.
7) D=1N4148 or equiv.
JT COMM- OCALA FL
Title
TuneMatic Schematic
Size B
Document Number
TM1-201
Date: April 10, 2016
Sheet 1 of